WUBT-236ACN(BT) Series

802.11ac/a/b/g/n 2T2R

Wi-Fi + Bluetooth 4.2 USB Module

Support Multiple Operation Systems (Android/Linux/Windows)

SparkLAN WUBT-236ACN(BT) is a highly integrated single-chip Wireless LAN (WLAN), Bluetooth USB module which supports 2 streams 802.11ac solutions with multi-user MIMO (Multiple-Input, Multiple-Output) wireless LAN (WLAN) and integrated Bluetooth 4.2. It is integrated 2Tx2R WLAN MAC, baseband, and dual band RF in a single chip USB module. WUBT-236ACN(BT) provides a cost effective solution for M2M (machine to machine) connectivity product/device by one USB port, it can be easily integrated into the most familiar operation system (Android/Linux/Windows).

WUBT-236ACN(BT) 802.11ac/abgn 2Tx2R USB WLAN/BT module with various USB input format & internal printing or external RF antenna connector for high performance wireless LAN and Bluetooth device. It is designed to provide completely M2M connection & excellent cost performance with low power consumption and enhance the advantages of robust system & applications.

Embedded Application

Applications include portable handheld devices, thin client computer, medical devices, network security & monitoring,
3D printer, TV, STB, POS, digital signs, gaming machine, robotic machinery, industrial tablets, etc.

Key Feature

- 802.11ac/a/b/g/n Wi-Fi +Bluetooth
- Support 802.11ac 2x2, compliant with MU-MIMO. Operates in 2.4GHz and 5GHz frequency bands
- Maximum data rates: 54Mbps in 802.11g, 300Mbps in 802.11n, 866.7Mbps in 802.11ac.
- Support Multiple Operation Systems (Android/Linux/Windows)

All Rights Reserved. SparkLAN may make changes to specification and descriptions at any time without prior notice.

Specification

Standards	IEEE 802.11ac/a/b/g/n (2T2R) Bluetooth v2.1+EDR, v3.0, v4.1, v4.2 LE
Chipset	Realtek RTL8822BU-CG
Data Rate	802.11b: 11Mbps / 802.11a/g: 54Mbps / 802.11n: MCS0~7/ 802.11ac: MCS0~9 Bluetooth: 1Mbps, 2Mbps and up to 3Mbps EDR
Operating Frequency	IEEE 802.11 ac/a/b/g/n ISM Band, 2.412GHz~2.484GHz, 5.150MHz~5.850MHz *Subject to local regulations
Interface	USB for Wireless LAN & Bluetooth
Form Factor	4-Pin Wafer connector / USB Type A
Antenna	2 x IPEX connector or printed antenna for 2T2R (ANT 0 for WIFI only, ANT1 for WIFI+BT)
Modulation	WiFi : 802.11b: DSSS (DBPSK, DQPSK, CCK) 802.11a/g: OFDM (BPSK, QPSK, 16-QAM, 64-QAM) 802.11n: OFDM (BPSK, QPSK, 16-QAM, 64-QAM) 802.11ac: OFDM (BPSK, QPSK, 16-QAM, 64-QAM, 256-QAM) Bluetooth: GFSK, Π/4 DQPSK, 8DPSK
Power Consumption	TX Mode: 450mA RX Mode: 250mA
Operating Voltage	DC 5V
Operating Temperature Range	-20°C ~+70°C
Storage Temperature Range	-40°C ~+80°C
Humidity **(Non-Condensing)**	5%~95% (Operating) 5%~90% (Storing)
Dimension (in mm)	40 x 20 mm (±0.5mm)
Weight (g)	[PU] / [MU] :4.6g ; [P4W] / [M4W] :2.8g
Driver Support	Windows 7, 8.1, 10 / Linux / Android
Security	WEP, WPA, WPA2

All Rights Reserved. SparkLAN may make changes to specification and descriptions at any time without prior notice.

OUTPUT POWER & SENSITIVITY

802.11b		
Data Rate	**Tx ± 2dBm**	**Rx Sensitivity**
11Mbps	15dBm	≦-80dBm

802.11g		
Data Rate	**Tx ± 2dBm**	**Rx Sensitivity**
54Mbps	14dBm	≦-70dBm

802.11n / 2.4GHz				
HT20	**Data Rate**	**Tx ± 2dBm(1TX)**	**Tx +/- 2dB (2TX)**	**Rx Sensitivity**
	MCS7	13dBm	16dBm	≦-61dBm
HT40	MCS7	13dBm	16dBm	≦-61dBm

802.11a		
Data Rate	**Tx ± 2dBm**	**Rx Sensitivity**
54Mbps	13dBm	≦-70dBm

802.11n / 5GHz				
HT20	**Data Rate**	**Tx ± 2dBm(1TX)**	**Tx +/- 2dB (2TX)**	**Rx Sensitivity**
	MCS7	12dBm	15dBm	≦-60dBm
HT40	MCS7	12dBm	15dBm	≦-60dBm

802.11ac				
VHT80	**Data Rate**	**Tx ± 2dBm(1TX)**	**Tx +/- 2dB (2TX)**	**Rx Sensitivity**
	MCS9	9dBm	12dBm	≦-51dBm

Bluetooth		
Data Rate	**Tx +/- 2dB (Class 2 device)**	**Rx Sensitivity**
3Mbps	0≦Output Power≦+4 dBm	<0.1% BER at -70dBm

All Rights Reserved. SparkLAN may make changes to specification and descriptions at any time without prior notice.

Block Diagram

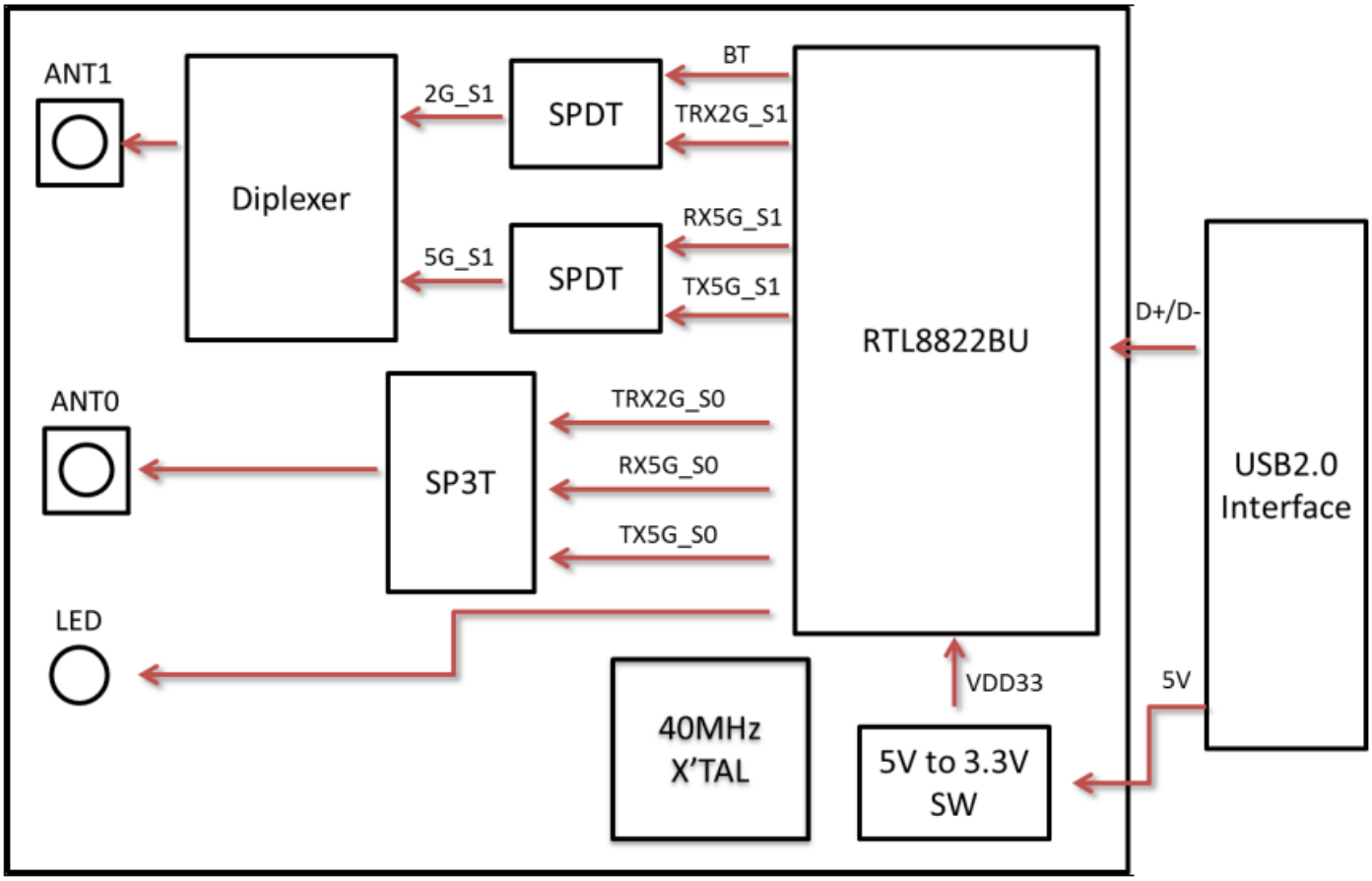

All Rights Reserved. SparkLAN may make changes to specification and descriptions at any time without prior notice.

Mechanical Dimension (mm)

USB Type A: WUBT-236ACN(BT) [PU] / WUBT-236ACN(BT) [MU]

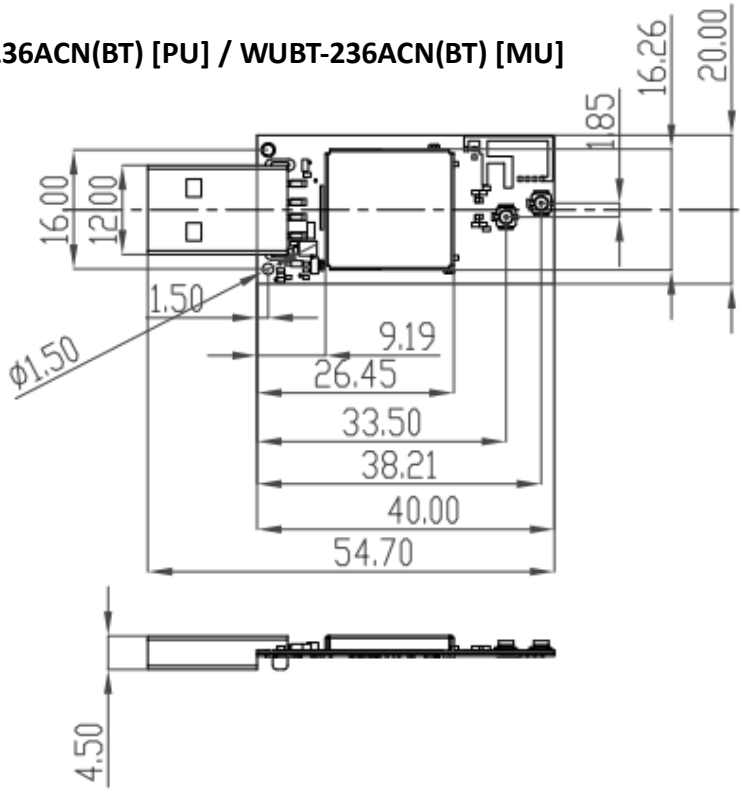

Wafer Type: WUBT-236ACN(BT) [M4W] / WUBT-236ACN(BT) [P4W]

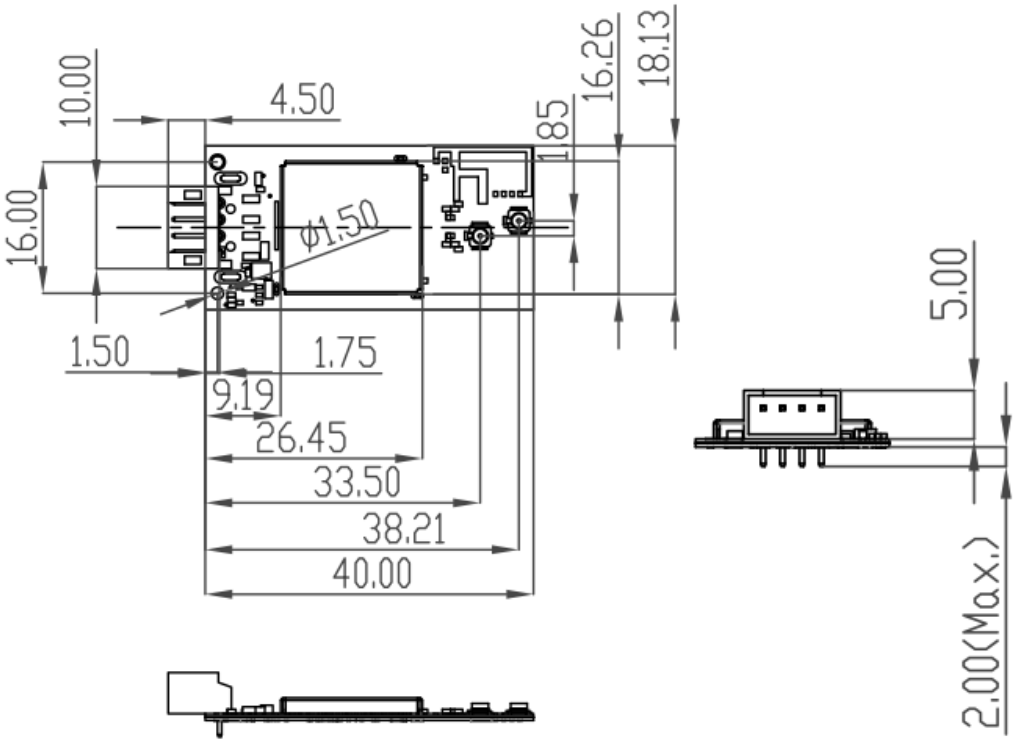

All Rights Reserved. SparkLAN may make changes to specification and descriptions at any time without prior notice.

Pin Define

WUBT-236ACN(BT) [M4W]

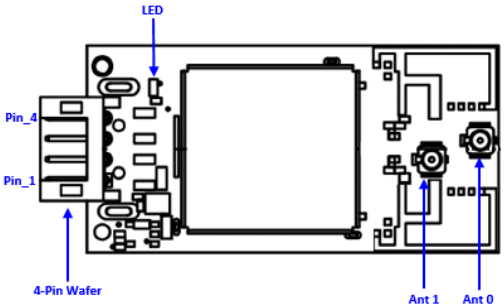

WUBT-236ACN(BT) [P4W]

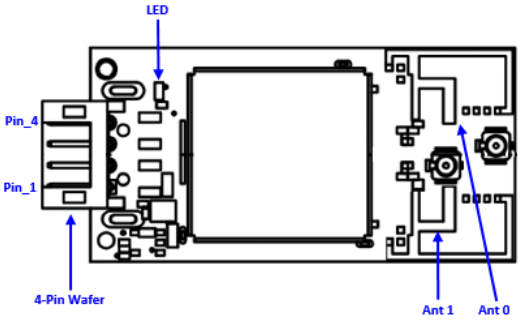

Pin	Description
Wafer Pin_1	USB 5V
Wafer Pin_2	USB D-
Wafer Pin_3	USB D+
Wafer Pin_4	USB GND
LED	WiFi LED
Ant_0	RF Antenna for WiFi 2.4GHz/5GHz
Ant_1	RF Antenna for WiFi 2.4GHz/5GHz & Bluetooth

WUBT-236ACN(BT) [MU]

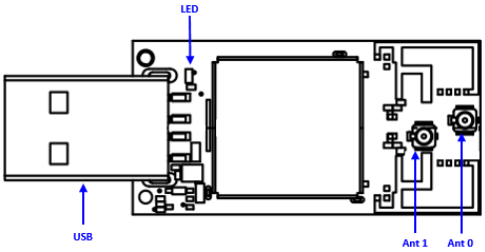

WUBT-236ACN(BT) [PU]

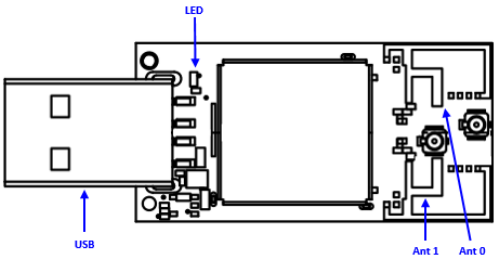

Pin	Description
USB	USB Type-A connector for USB2.0
LED	WiFi LED
Ant_0	RF Antenna for WiFi 2.4GHz/5GHz
Ant_1	RF Antenna for WiFi 2.4GHz/5GHz & Bluetooth

All Rights Reserved. SparkLAN may make changes to specification and descriptions at any time without prior notice.

Certification

- ■ **FCC**
- ■ **IC**
- □ **NCC**
- ■ **CE** (RED EN 300 328 V2.1.1 / EN 301 893 V2.1.1)
- ■ **MIC**
- □ **ASNZS**

Ordering Information

Product Name	Part Number	Description
WUBT-236ACN(BT) [M4W]	R9701830009	802.11ac/a/b/g/n 2T2R Wi-Fi + BT USB Module (4-Pin Wafer + IPEX)
WUBT-236ACN(BT) [P4W]	R9701830007	802.11ac/a/b/g/n 2T2R Wi-Fi + BT USB Module (4-Pin Wafer + Printed Ant)
WUBT-236ACN(BT) [MU]	R9701830008	802.11ac/a/b/g/n 2T2R Wi-Fi + BT USB Module (USB Type A + IPEX)
WUBT-236ACN(BT) [PU]	R9701830006	802.11ac/a/b/g/n 2T2R Wi-Fi + BT USB Module (USB Type A + Printed Ant)

Optional Accessory

Product Name	Part Number	Description
AD-103AG	R3410110203	Dipole Antenna, 2dBi 2.4GHz/5GHz, RP-SMA(M) connector
AD-302N	R3410110221	Dipole Antenna, 3dBi/2dBi 2.4G/5GHz, RP-SMA(M) connector
AD-303N	R3410110222	Dipole Antenna, 3dBi/3dBi 2.4G/5GHz, RP-SMA(M) connector
AD-305N	R3410110223	Dipole Antenna, 5dBi/5dBi 2.4G/5GHz, RP-SMA(M) coonector
CBIRF-ME150	R3470300023	I-PEX/MHF1 to RP-SMA Female; L:150mm; Coaxial 1.37 Black
CBIRF-ME250	R3470300024	I-PEX/MHF1 to RP-SMA Female; L:250mm; Coaxial 1.37 Black
CBPP-C200	R3200700010	4-pin WTB to 4 pin WTB_L200mm
CBPW-C200	R3200700011	4-pin WTB to flying leads

All Rights Reserved. SparkLAN may make changes to specification and descriptions at any time without prior notice.